WATEX
PUHTA VEE NIMEL

ecosoft

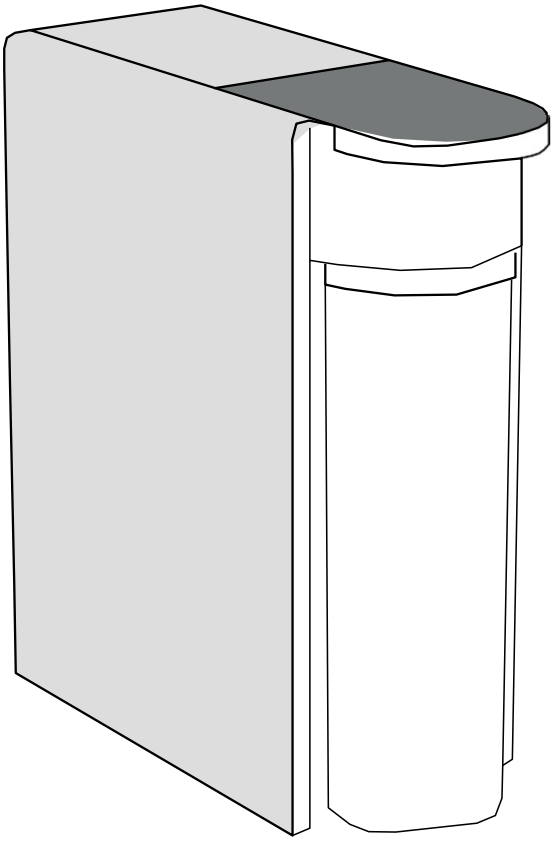

CROSS SOLO

DIRECT FLOW REVERSE OSMOSIS FILTER

EN INSTALLATION AND FIRST START-UP GUIDE
UA ІНСТРУКЦІЯ З МОНТАЖУ ТА ПЕРШОГО ЗАПУСКУ
PL INSTRUKCJA INSTALACJI I PIERWSZEGO URUCHOMIENIA
ES INSTALACIÓN Y PRIMER PUESTA EN MARCHA

Watex Estonia OÜ, Reti tee 11, Peetri, 75312 Harju maakond, 58862212, info@veefiltrid.ee, www.veefiltrid.ee

CONTENT

INSTALLATION AND FIRST START-UP

WARNINGS.....**3**

SUPPLY WATER QUALITY RE-QUIREMENTS **4**

UNPACKING AND INSPECTION **5**

PREPARATION FOR INSTALLATION.....**6**

INSTALL FEED WATER CONNECTION **7**

INSTALLATION OF THE LEAK SENSOR **10**

DRAIN CONNECTION **11**

DRINKING FAUCET CONNECTION.....**13**

FIRST FILTER START-UP.....**15**

CARTRIDGE REPLACEMENT GUIDE

REMOVING THE USED CARTRIDGE..... **18**

INSTALLING THE NEW CARTRIDGE.....**19**

FILTER STARTUP **19**

Watex Estonia OÜ, Reti tee 11, Peetri, 75312 Harju maakond, 58862212, info@veefiltrid.ee, www.veefiltrid.ee

INSTALLATION AND FIRST START-UP

EN

1 WARNINGS

1 Input Water: Connect only to a cold water supply that is free of chlorine and sediment impurities. Refer to the CROSS Solo filter manual for detailed water requirements.
2 Installation: Ensure all connections are securely tightened.
3 Pressure Regulator: A pressure regulator must be installed before the system. Recommended pressure: 1–4 bar.
4 Electrical Safety: Connect the adapter only to a grounded outlet. Do not use the filter with a damaged power cable.
5 Monitoring: Monitor the system for leaks during the first 8 hours after installation.
6 Maintenance: Replace cartridges every 12 months. Replacement frequency may vary depending on water quality and usage intensity.
7 Usage: The filter is designed exclusively for purifying drinking water.
8 Warranty: Failure to comply with these guidelines may void the warranty.

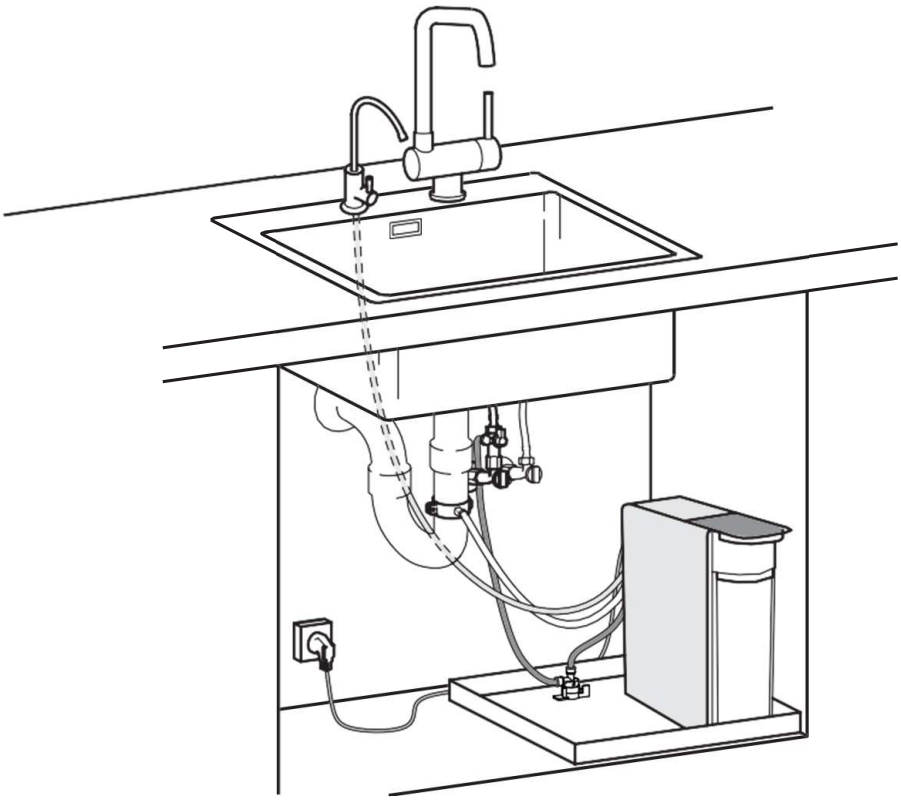

Watex Estonia OÜ, Reti tee 11, Peetri, 75312 Harju maakond, 58862212, info@veefiltrid.ee, www.veefiltrid.ee

2 SUPPLY WATER QUALITY REQUIREMENTS

Index	Value**
pH	6.5–8.5
TDS	max 1000 mg/L
Hardness	300 mg $CaCO_3$/L (max 20*dH)
Free chlorine	max 0.01 mg/L***
Iron	max 0.3 mg/L

Index	Value**
Manganese	max 0.1 mg/L
Chemical oxygen demand	max 5 mg O_2/L
Total bacterial count (TBC)	max 50 CFU/mL
E. coli titer	max 3
Turbidity	max 3.5 NTU

Do not use this filter with microbiologically unsafe water or water of unknown quality unless it has been adequately disinfected before or after filtration.

* If water supply does not meet the requirements, service life of membrane and/or pre-filter cartridges may be shortened.

** If your home is supplied with raw wellwater, perform laboratory test of your water before installing a reverse osmosis filter. If any of your water indices exceed the limit, consider using a water treatment system to correct supply water quality. Refer to water treatment specialists or companies for advice and proper equipment selection.

*** If the water quality requirements for free chlorine and turbidity exceed the requirements for the water supplied to the RO filter, it is recommended to install Ecosoft in-line filter FDPP3P0110/G118 with dual gradient PP sediment filter and activated carbon cartridge.

Watex Estonia OÜ, Reti tee 11, Peetri, 75312 Harju maakond, 58862212, info@veefiltrid.ee, www.veefiltrid.ee

3 UNPACKING AND INSPECTION

1 Carefully unpack the system.
2 Inspect the contents for damage. Do not open the sealed component package.

Important: The manufacturer does not accept claims if the package is opened.

3 In case of missing parts or damage, contact the seller immediately.
4 If the product was damaged during transportation, contact the delivery company immediately.

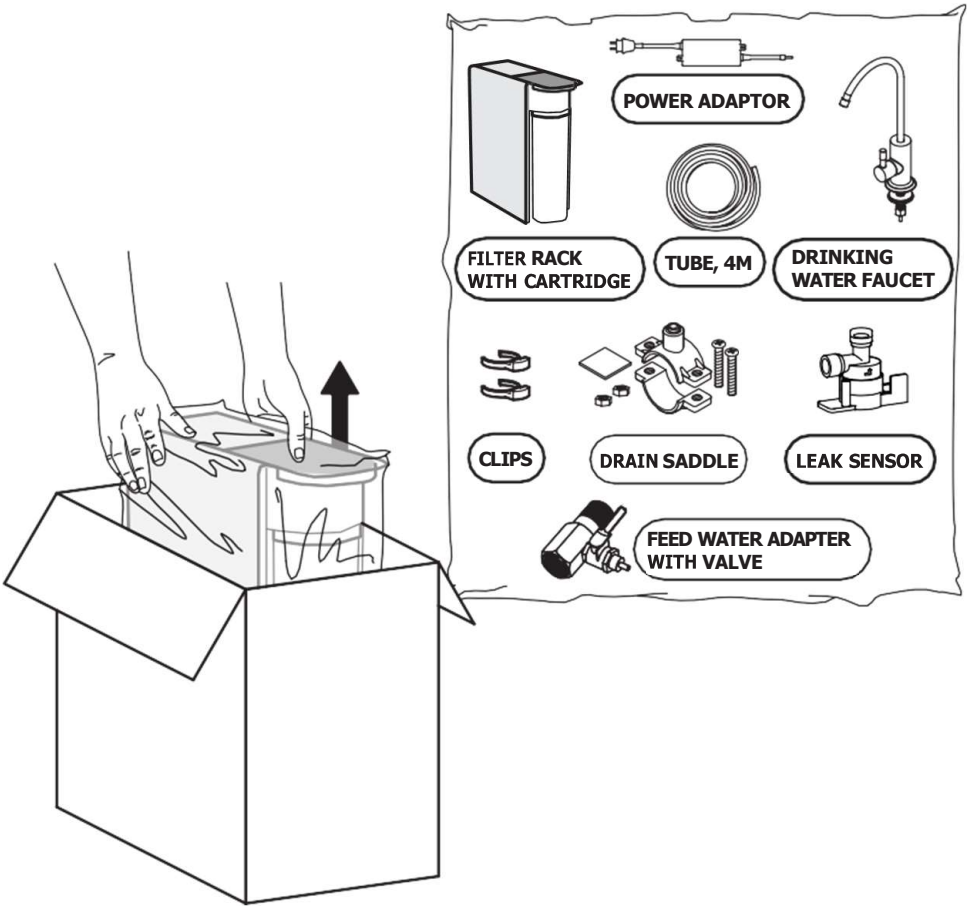

4 PREPARATION FOR INSTALLATION

1 Ensure you have all necessary tools and equipment, and the installation space is prepared.

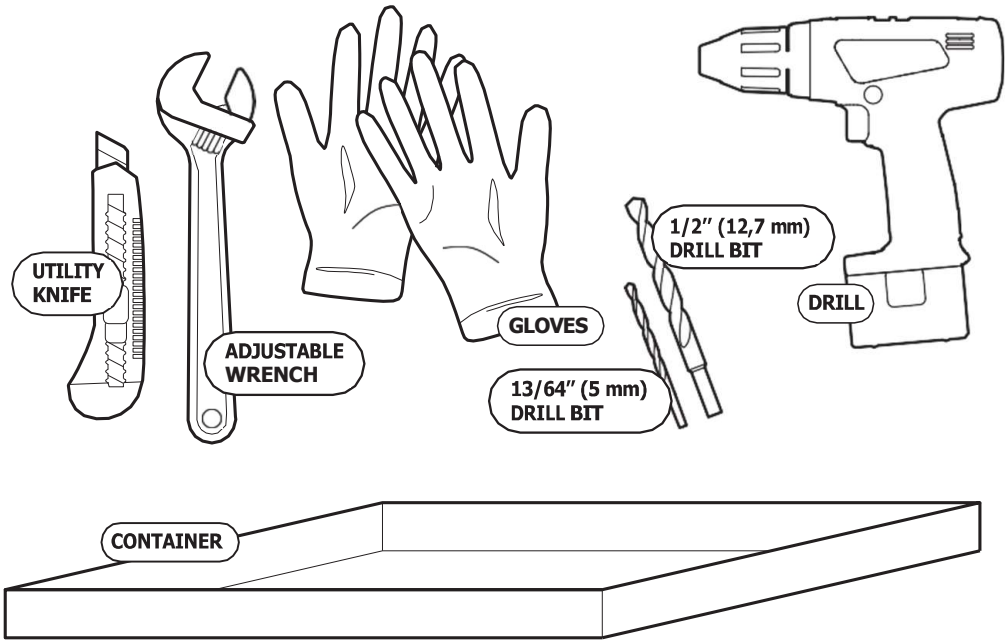

2 Carefully remove all protective plugs from the back panel of the filter.

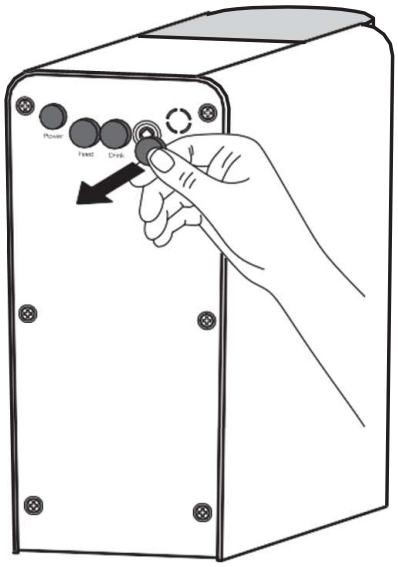

Watex Estonia OÜ, Reti tee 11, Peetri, 75312 Harju maakond, 58862212, info@veefiltrid.ee, www.veefiltrid.ee

5 INSTALL FEED WATER CONNECTION

Ensure the filter is connected only to cold tap water.

1 Shut off the cold water valve at the entrance to the apartment and open the sink faucet to release pressure from the system. Then, close the faucet.

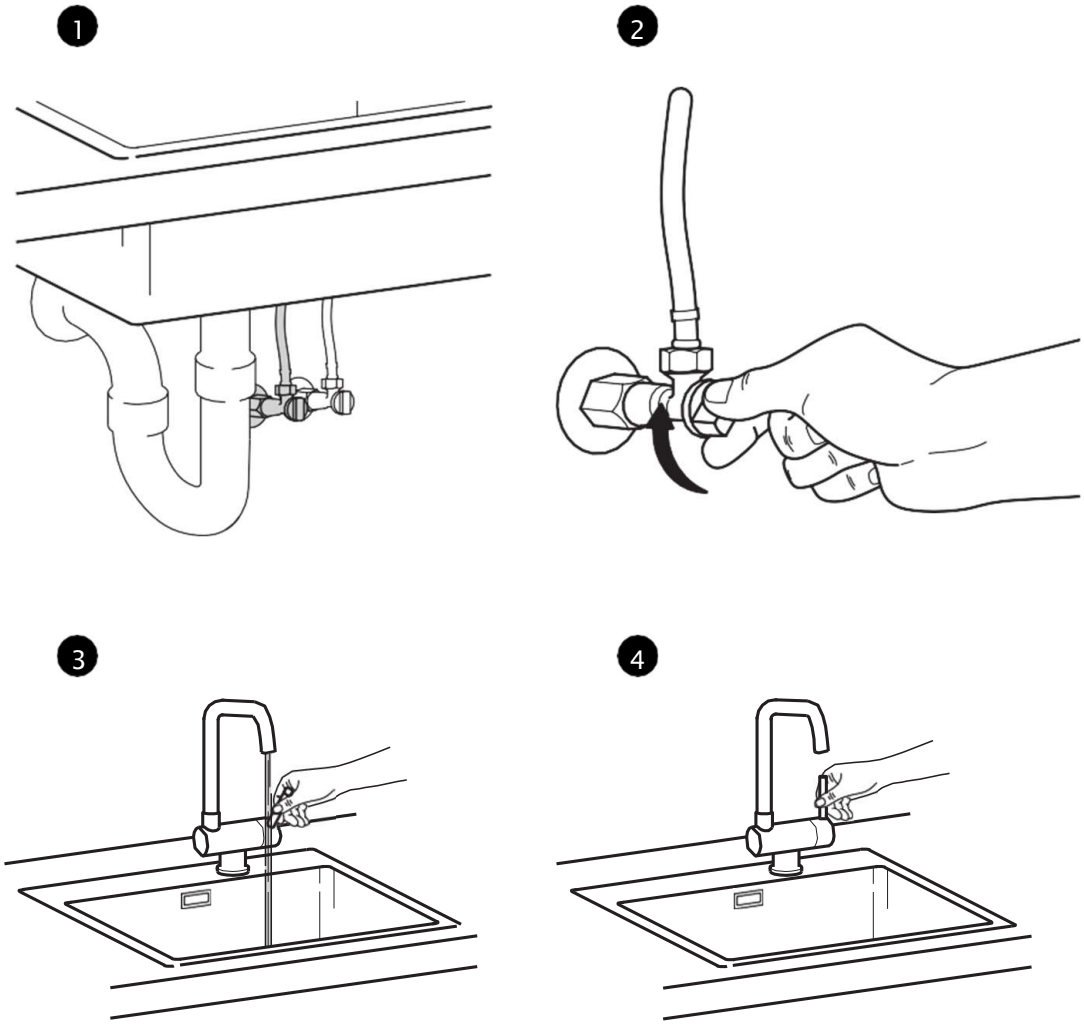

To connect to a 1/2'' cold water feed line, it is sufficient to install a tee in the feed line.

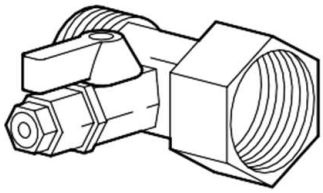

If you have a 3/8″ connection, use the additional adapters included in the kit.

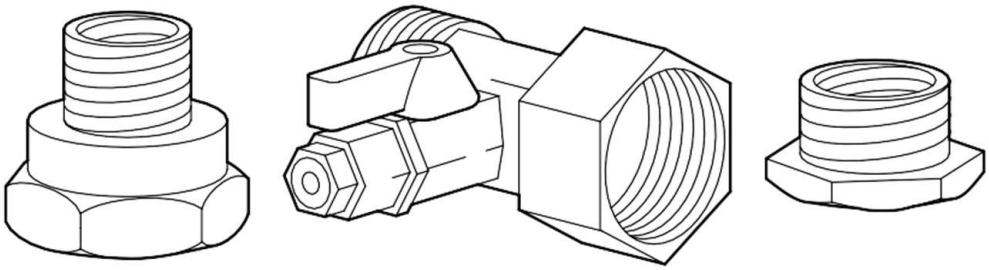

2 Install the feed water adapter in the cold water pipe.

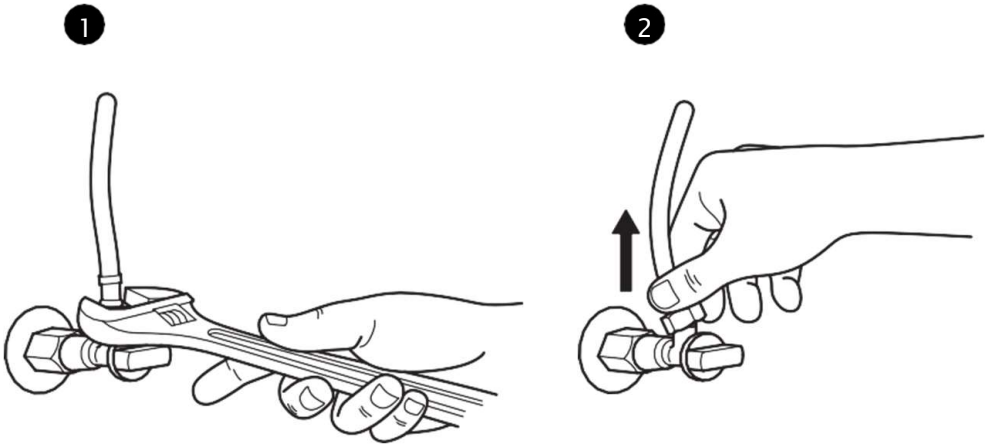

Watex Estonia OÜ, Reti tee 11, Peetri, 75312 Harju maakond, 58862212, info@veefiltrid.ee, www.veefiltrid.ee

3 Tighten the nut by hand, then use a wrench for added security.

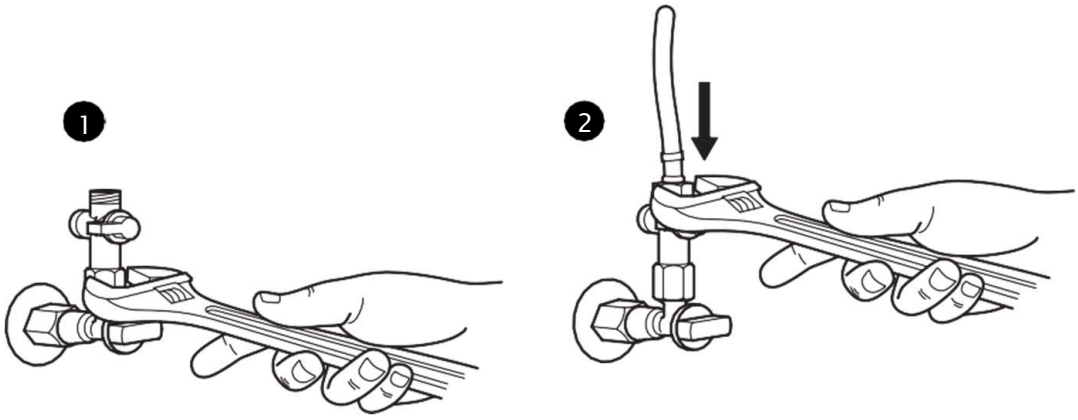

4 Cut the required length of the tubing, connect it to the feed water adapter and use fixing clip.

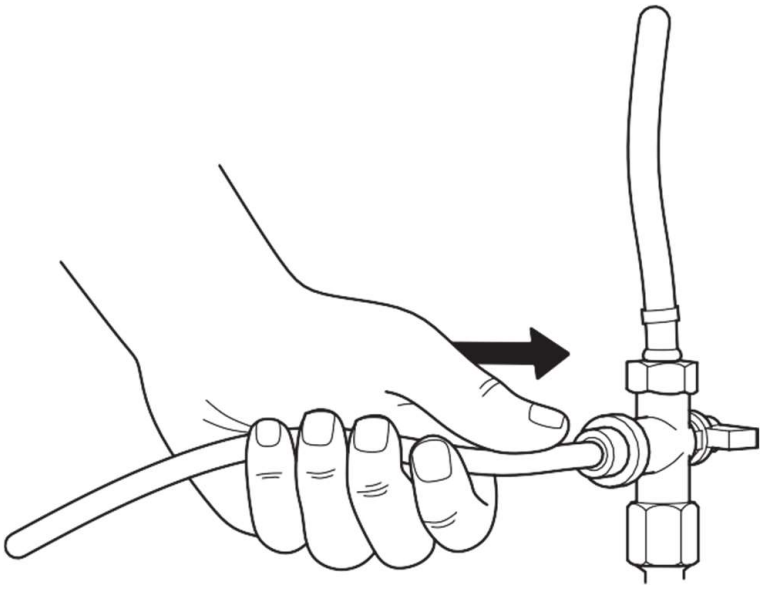

6 INSTALLATION OF THE LEAK SENSOR

1 Attach the adhesive stickers to the surface.
2 Install the leak detector element in the space marked.
3 Place the leak detector on the stickers.
4 Connect the tube from the feed water adapter to the sensor.
5 Cut the tube and connect it to the sensor.
6 Connect the tube to the «Feed» panel and secure the tube with the clips for reliable fixation.

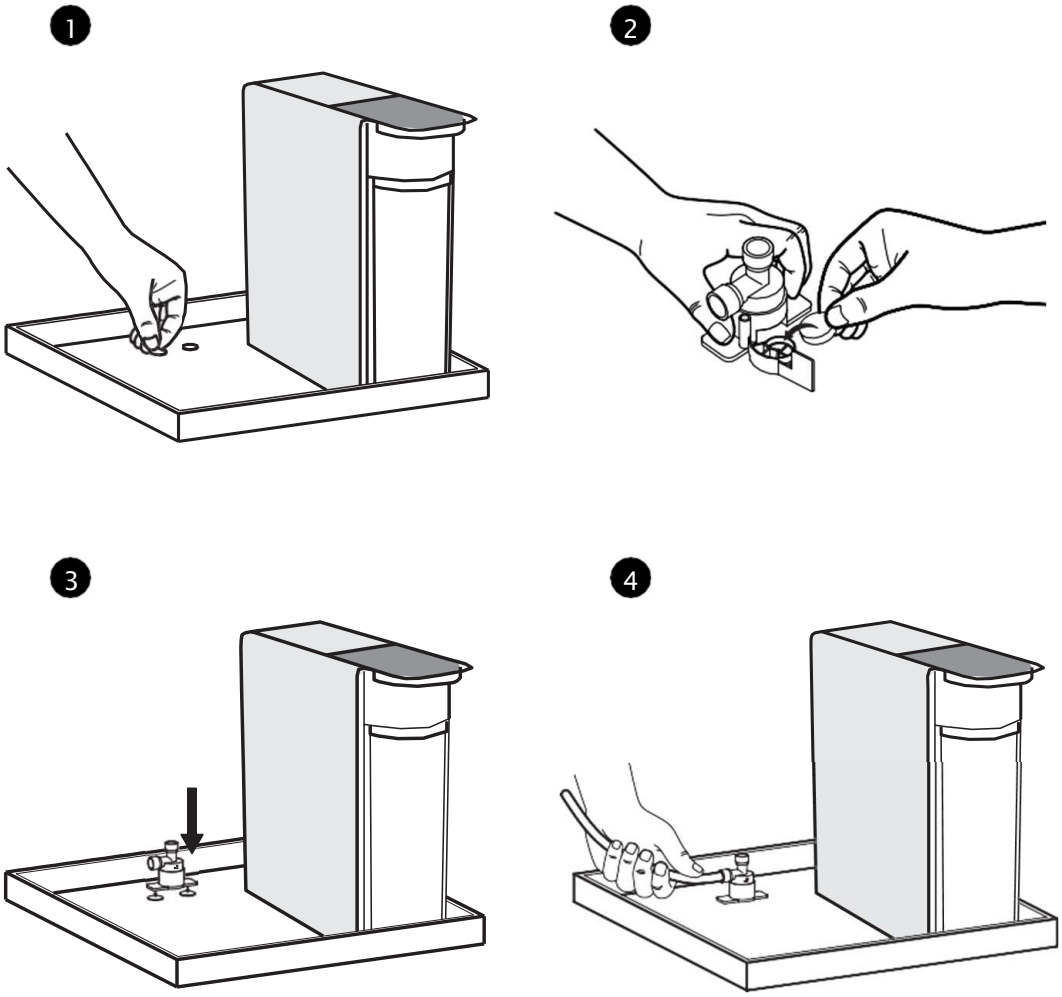

Watex Estonia OÜ, Reti tee 11, Peetri, 75312 Harju maakond, 58862212, info@veefiltrid.ee, www.veefiltrid.ee

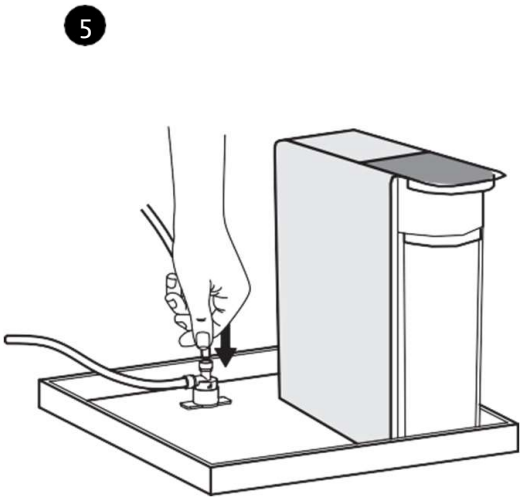

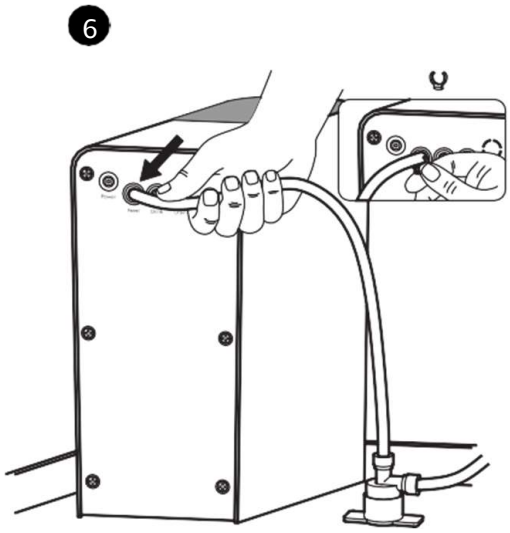

7 DRAIN CONNECTION

1 Drill a 5 mm hole in the drainpipe.
2 Install the sealing gasket with its adhesive side facing the pipe.
3 Attach the drain clamp, ensuring the hole in the pipe aligns with the clamp's fitting.
4 Tighten the clamp screws.
5 Insert the tube into the drain fitting.
6 Connect the tubing to the «Drain» port on the filter and secure it with a fixing clip.

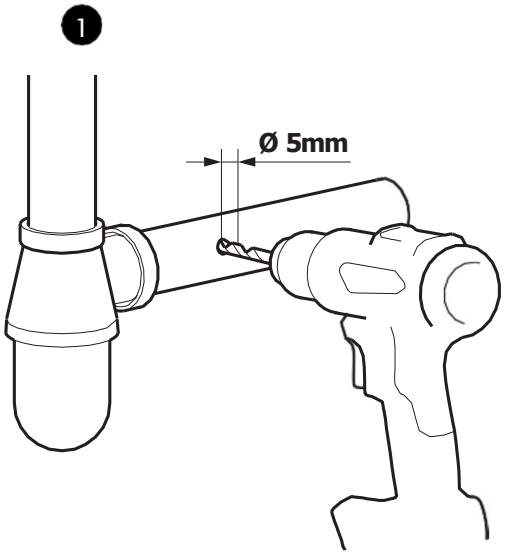

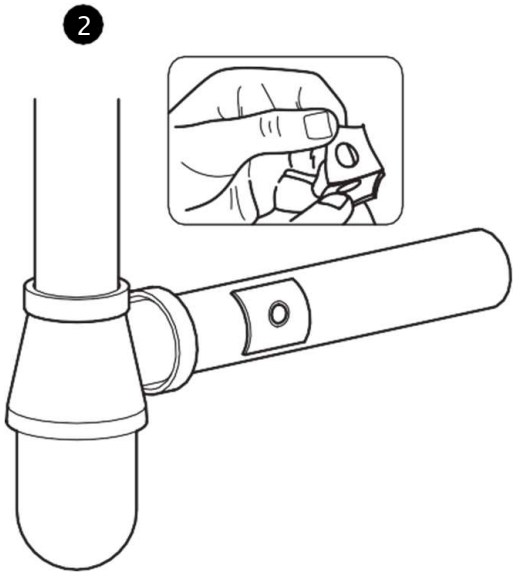

3

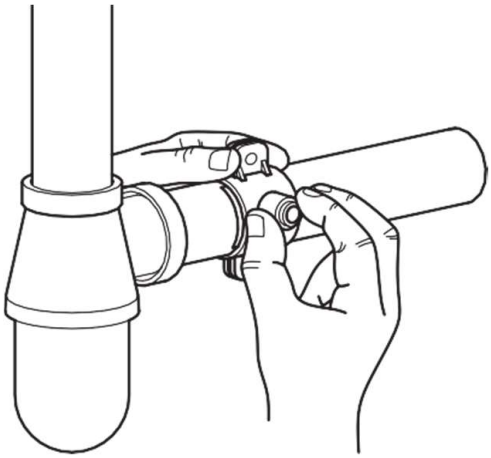

4

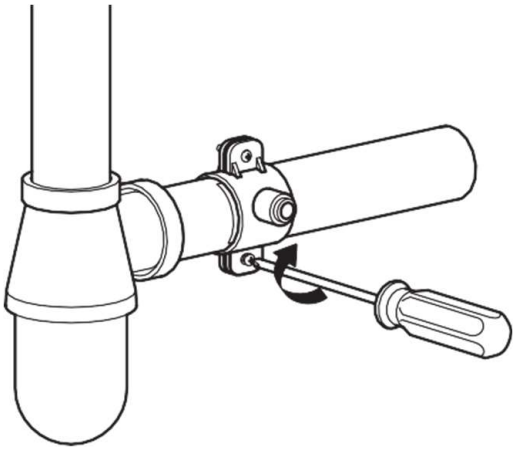

5

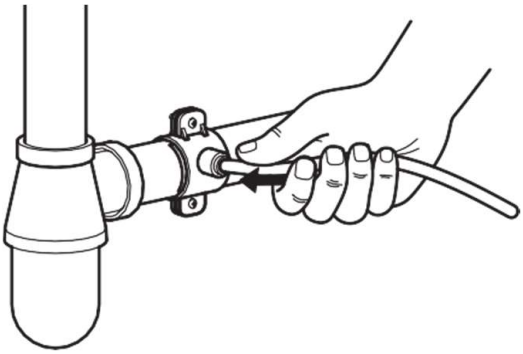

6

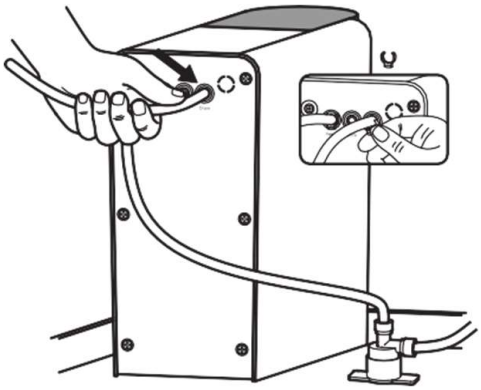

Watex Estonia OÜ, Reti tee 11, Peetri, 75312 Harju maakond, 58862212, info@veefiltrid.ee, www.veefiltrid.ee

8 DRINKING FAUCET CONNECTION

1 Drill a 12.5 mm hole in the countertop or sink.
2 Assemble the faucet on the countertop or sink.

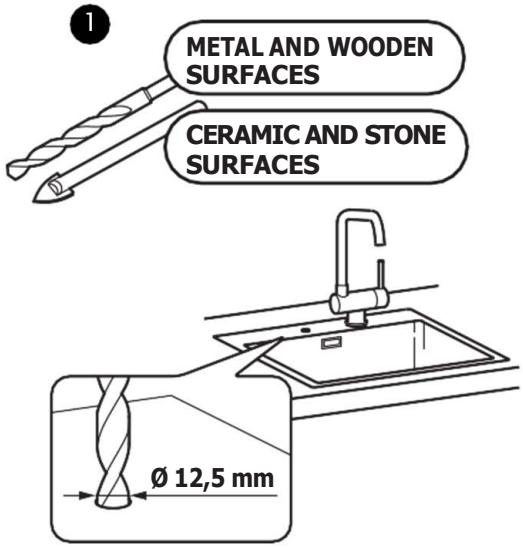

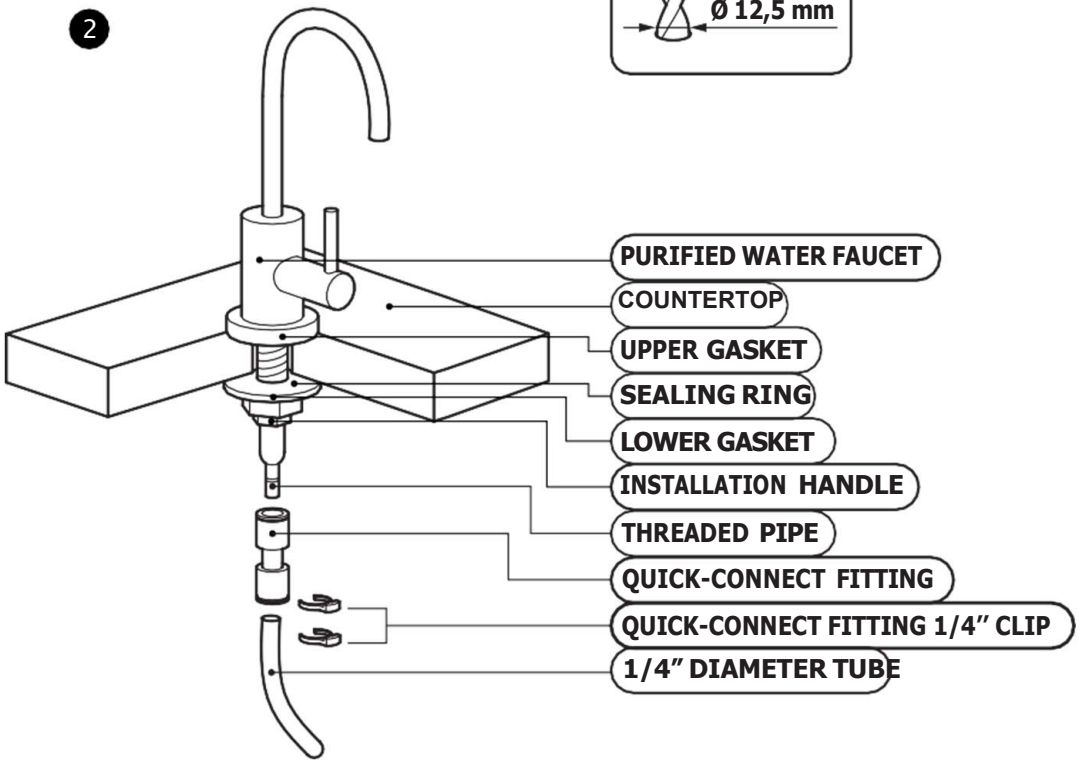

Watex Estonia OÜ, Reti tee 11, Peetri, 75312 Harju maakond, 58862212, info@veefiltrid.ee, www.veefiltrid.ee

3 Insert the quick-connect fitting into the faucet pipe and secure it with a clip.
4 Cut the required length of tubing and insert it into the quick-connect fitting, securing it with a clip.
5 Connect the tubing to the «Drink» port on the connection panel and secure it with a fixing clip.

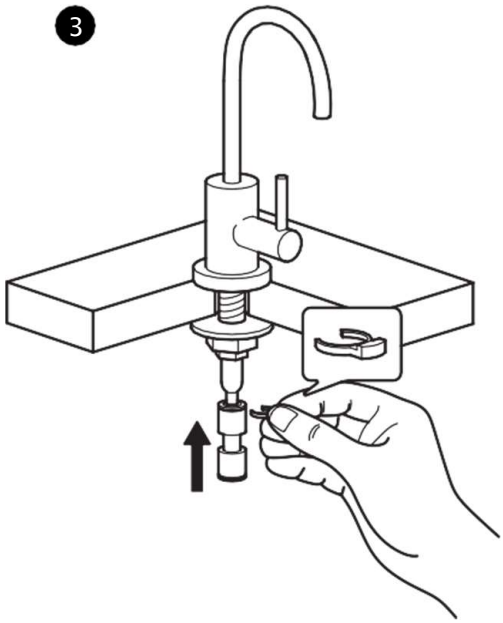

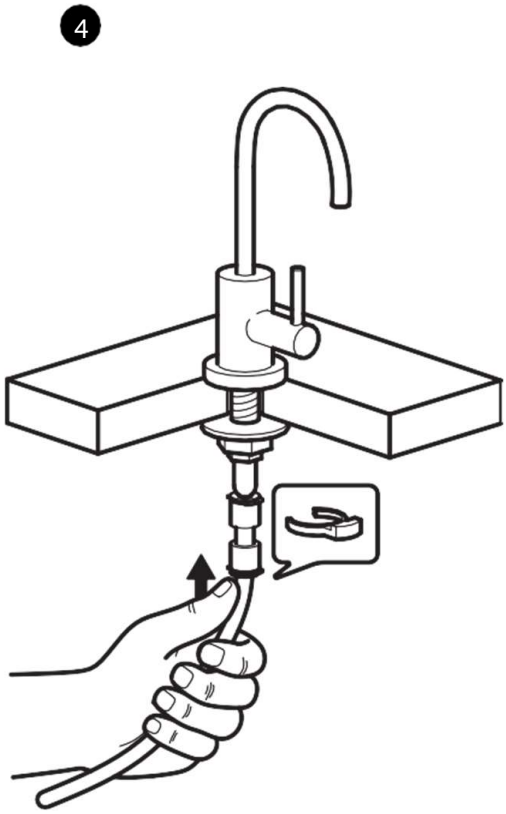

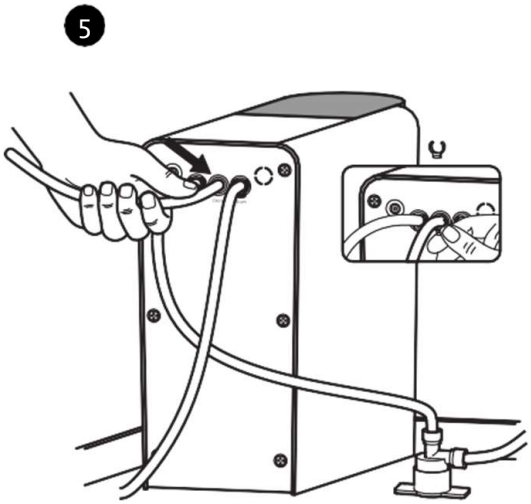

Watex Estonia OÜ, Reti tee 11, Peetri, 75312 Harju maakond, 58862212, info@veefiltrid.ee, www.veefiltrid.ee

FIRST FILTER START-UP

1
Open the cold water supply valve.
2
Open the purified water faucet.
3
Connect the power adapter to the power outlet on the connection panel. A short beep will sound, and three indicators will light up in blue. The filter will automatically flush for 18 seconds.
4
Flush the filter for an additional 10 minutes by opening the purified water faucet. Indicators 1 and 3 will stay on, while indicator 2 will blink. After 10 minutes, close the purified water faucet.
5
Check all connections for leaks by wiping them with a paper towel. Ensure that all tubing is securely connected.
6
Close the purified water faucet and make sure the faucet is not leaking. The filter installation is complete.

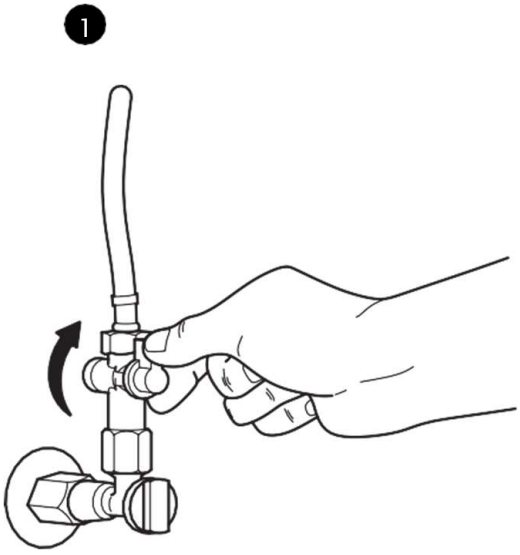

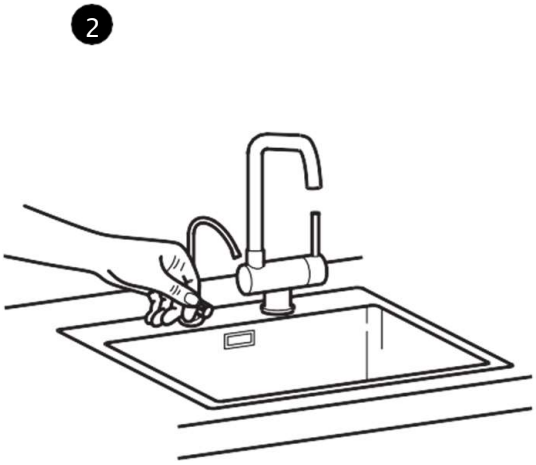

3

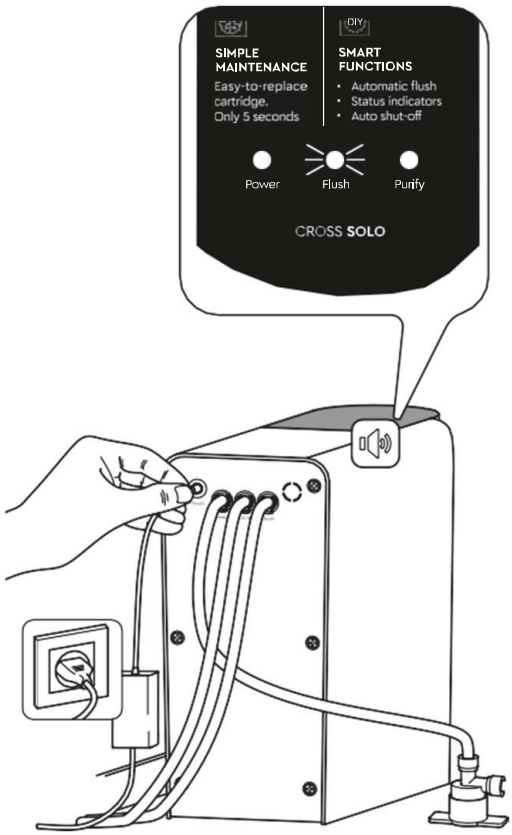

4

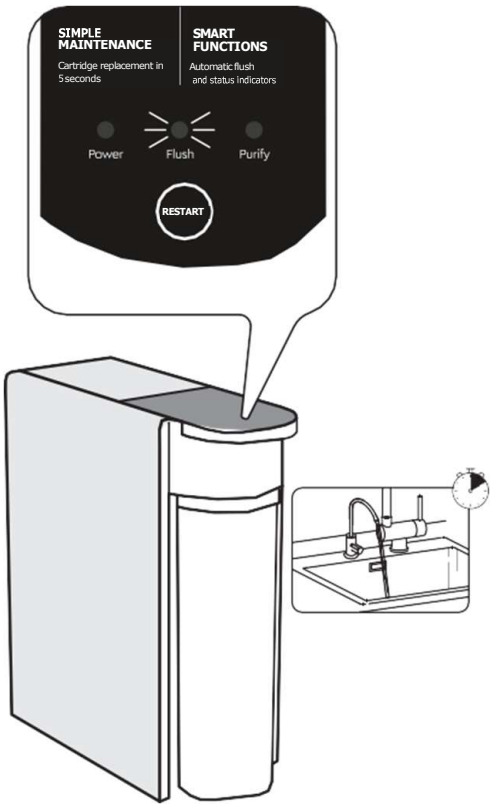

5

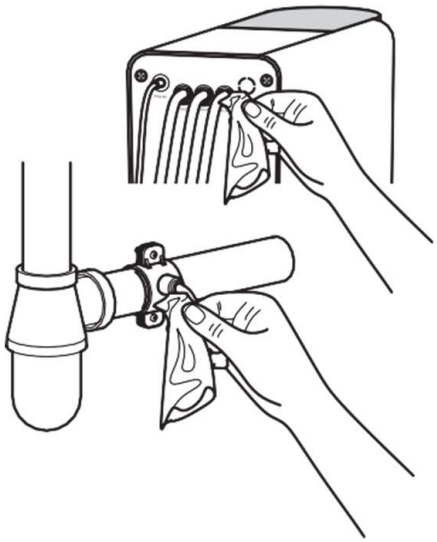

6

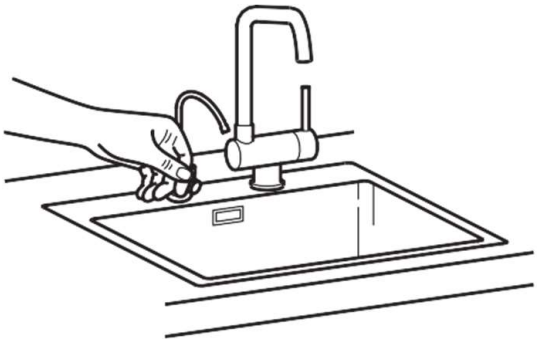

Watex Estonia OÜ, Reti tee 11, Peetri, 75312 Harju maakond, 58862212, info@veefiltrid.ee, www.veefiltrid.ee

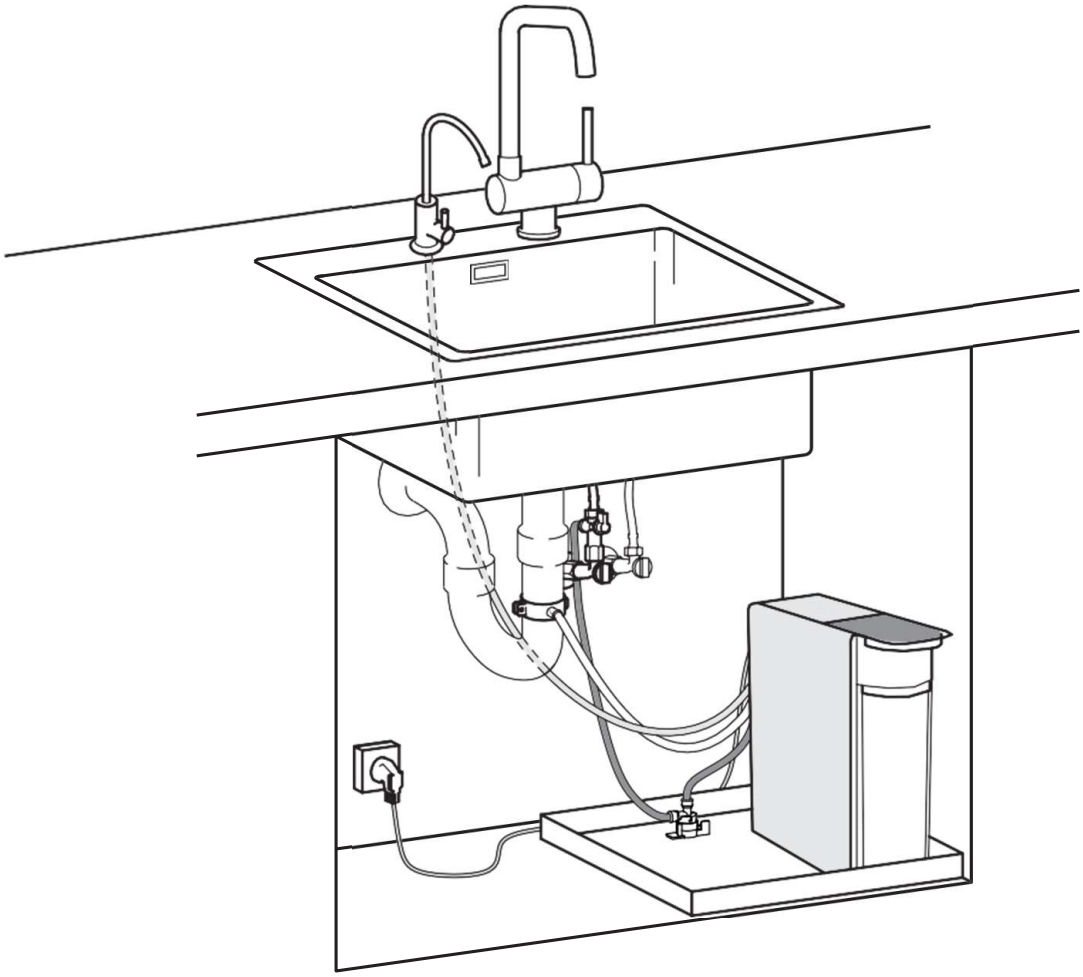

CARTRIDGE REPLACEMENT GUIDE

Before starting:
1. Close the cold water valve at the system inlet.
2. Unplug the filter by disconnecting the power adapter.

1 REMOVING THE USED CARTRIDGE

1 Open the safety lock.

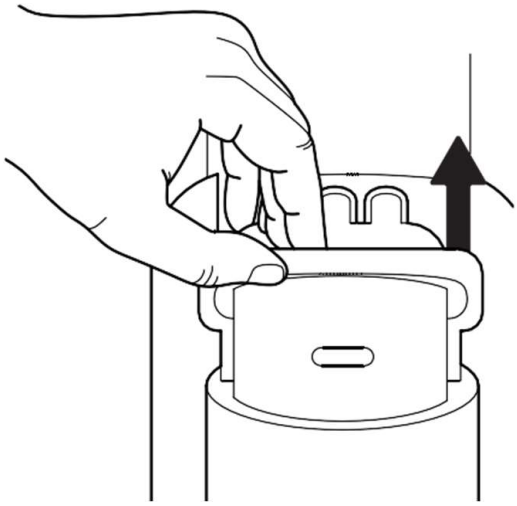

2 Remove the used cartridge and dispose of it properly.

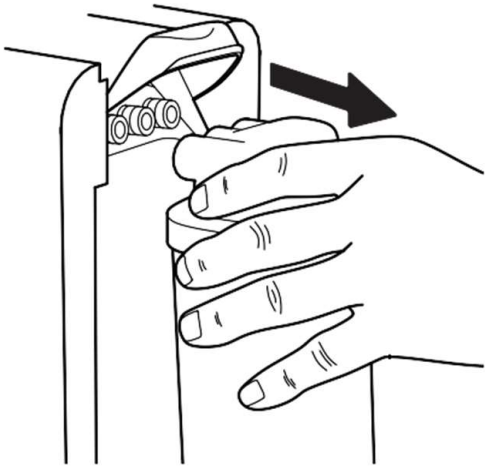

Watex Estonia OÜ, Reti tee 11, Peetri, 75312 Harju maakond, 58862212, info@veefiltrid.ee, www.veefiltrid.ee

2 INSTALLING THE NEW CARTRIDGE

1 Unpack the new cartridge.
2 Remove the protective caps (if present).
3 Insert the cartridge fully into the slot.
4 Secure the cartridge and close the safety lock.

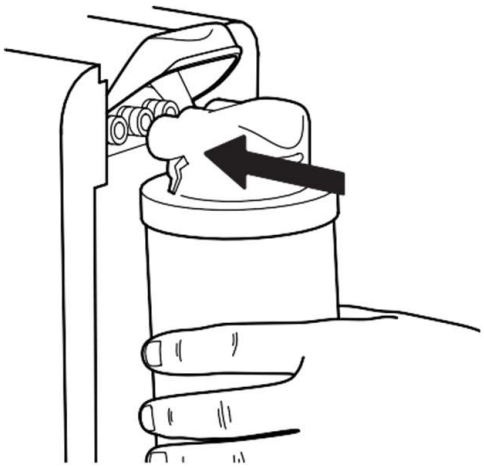

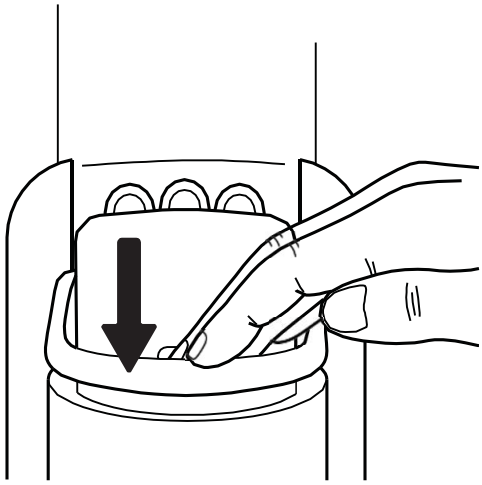

3 FILTER STARTUP

1
Open the cold water supply valve.
2
Open the purified water faucet.

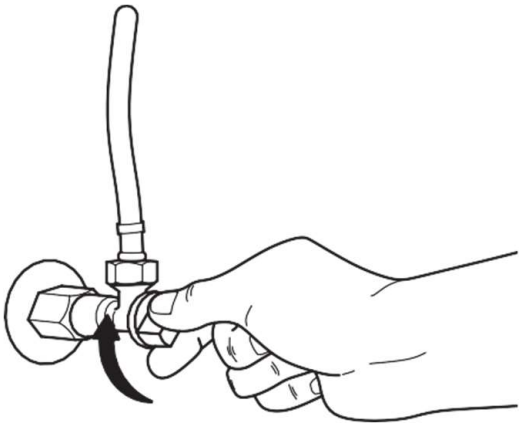

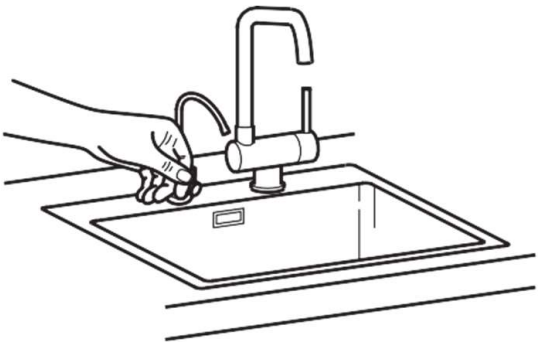

3
Connect the power adapter to the power outlet on the connection panel. After installing the new cartridge, press and hold the RESTART button to reset the cartridge life. A short beep will sound, and three indicators will light up in blue. The filter will automatically flush for 18 seconds.

4 Rinse the filter for a further 10 minutes by opening the purified water faucet. Indicators 1 and 2 will remain on and indicator 3 will flash. After 10 minutes, close the purified water faucet

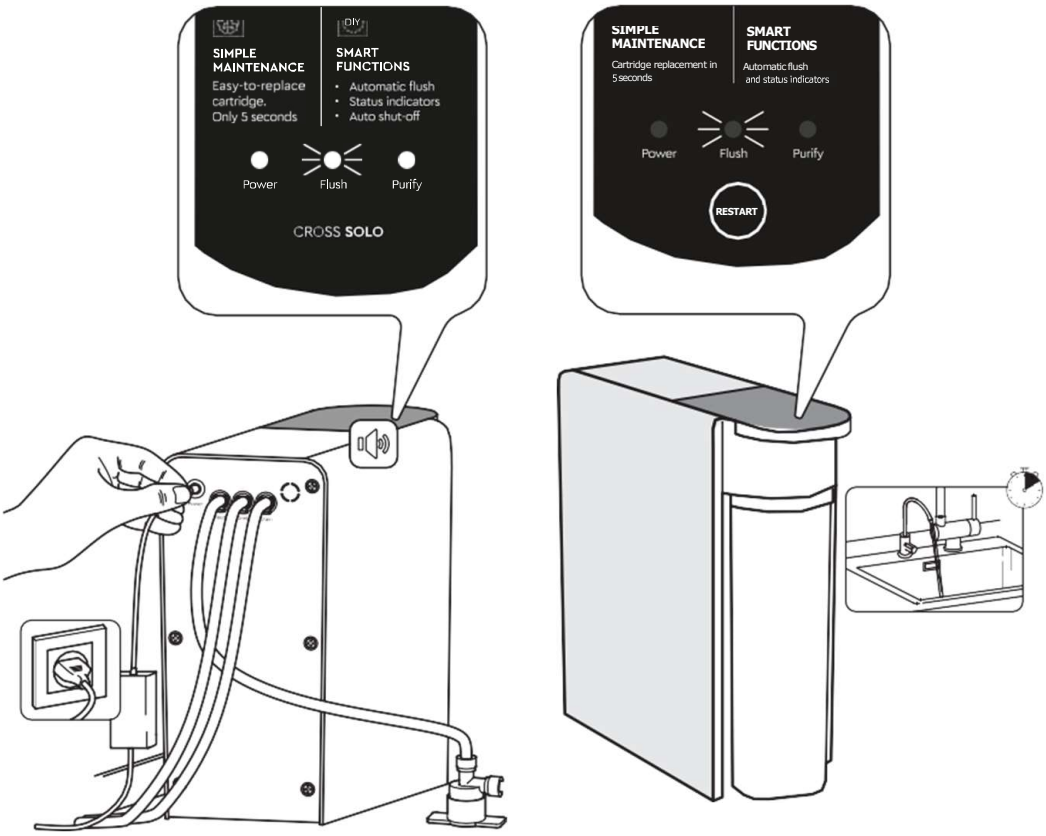

5 Check all connections for leaks by wiping them with a paper towel. Ensure that all tubing is securely connected.

Watex Estonia OÜ, Reti tee 11, Peetri, 75312 Harju maakond, 58862212, info@veefiltrid.ee, www.veefiltrid.ee

6 Close the purified water faucet.

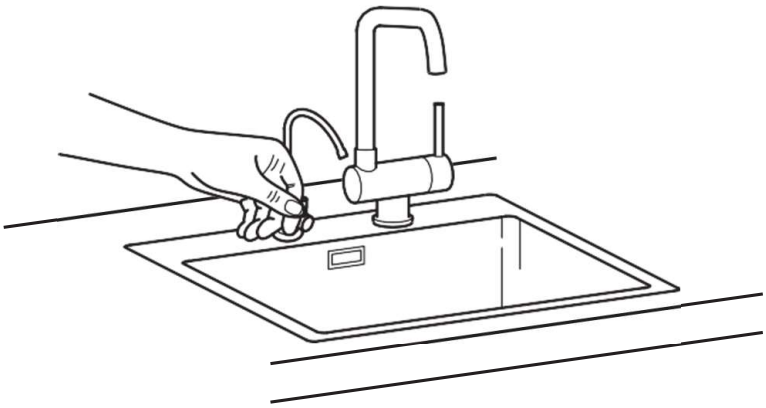

7 Cartridge replacement is complete. Your filter is now ready for use!

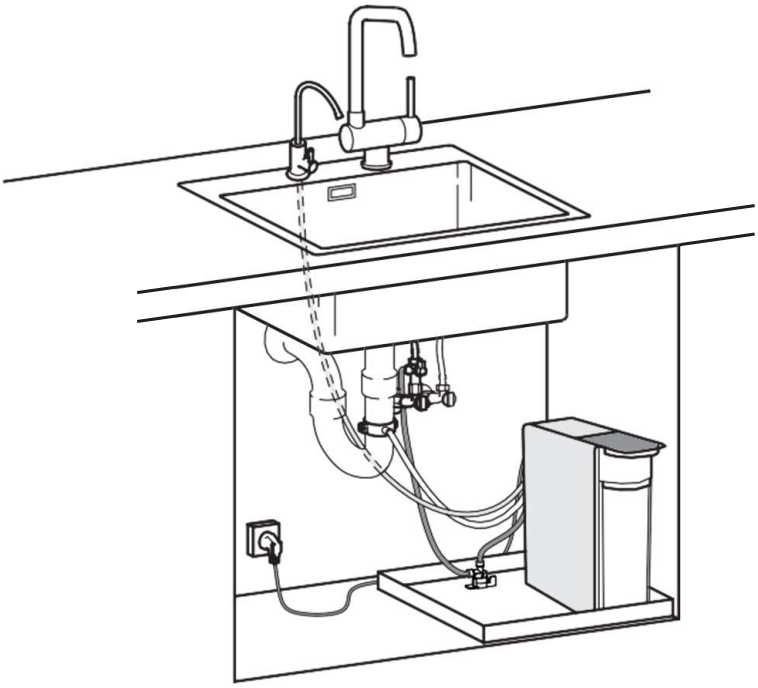

Attention: We recommend pouring the first two morning glasses down the drain or using them to water your flowers, as purified water after overnight non-operating may have slightly higher levels of dissolved substances due to natural membrane diffusion.